PUBLIC NOTICE

In accordance with the statutes of the State of Illinois and the ordinances of the City of Highland Park, the next regular meeting of the Plan & Design Commission of the City of Highland Park is scheduled to be held at the hour of 7:00 P.M. on Tuesday, February 3, 2026, at City Hall, 1707 St Johns Avenue, Highland Park, Illinois.

Individuals with questions or feedback about an agenda item may email Karl Burhop, Senior Planner, with the Community Development Department, at kburhop@cityhpil.com. All emails and comments submitted for the Commission will be made public.

The City, in compliance with the Americans with Disabilities Act, requests that persons with disabilities who require certain accommodations to allow them to observe or participate in this hearing, or who have questions about the accessibility of the meeting facilities, contact the City's ADA coordinator Emily Taub at etaub@cityhpil.com or 847.926.1005.

The City encourages individuals to sign-up for its eNews for important information from the City and its government partners. The City updates its web site daily and also posts on social media daily. To sign-up for the eNews, visit www.cityhpil.com.

At the meeting, it is anticipated that there will be a discussion of the following items:

City of Highland Park
Regular Meeting of the Plan and Design Commission
Highland Park City Hall, 1707 St Johns Avenue

February 3, 2026

7:00 P.M.
MEETING AGENDA

I. Call to Order

II. Roll Call

III. Approval of Minutes

a. Consideration of Plan and Design Commission Minutes

i. Regular Meeting on Jan. 20, 2026

IV. Scheduled Business

a. DES-2026-00085 for Design Review and Sign Package with Variations (172-178 Skokie Valley Rd.)

b. DES-2026-00086 for Design Review and Sign Package with Variations (1849 Green Bay Rd.)

V. Other Business

a. Information Item: Administrative Design Review Update

b. Next Meeting – Feb. 17, 2026, A Regular Meeting at City Hall

c. Case Briefing

VI. Business from the Public

VII. Adjournment

MINUTES OF A REGULAR MEETING
PLAN AND DESIGN COMMISSION
OF THE CITY OF HIGHLAND PARK, ILLINOIS

MEETING DATE: Tuesday, January 20, 2026

MEETING LOCATION: Council Chambers, City Hall, 1707 St. Johns Avenue, Highland Park, IL

CALL TO ORDER
At 7:01 p.m., Chairperson Kerch called the meeting to order. Staff was asked to call the roll.

ROLL CALL
Commissioners Present: Chairperson Kerch; Commissioners Fettner, Ihnchak, Mantis, Moore, & Nanus

Commissioners Absent: Commissioner Henry

Councilmember Present: Ross

Student Council Absent: Fallas

Staff declared that a quorum was present.

Guests Present: Katie Jahnke Dale, Partner/DLA Piper

Staff Present: Fontane & Burhop

Others Present: Marcus Martinez, Corporation Counsel/Elrod Friedman LLP
Gale Cerabona/Recorder

APPROVAL OF MINUTES
Regular Meeting of the Plan and Design Commission – January 6, 2026

Commissioner Nanus moved to approve the January 6, 2026, PDC regular meeting minutes. Commissioner Mantis seconded the motion.

Commissioner Moore amended, on Page 3, Line 11, that 80 square feet be replaced with 80*,000 square feet*.

Commissioners Nanus & Mantis accepted the amendment.

On a voice vote
Voting Yea Chairperson Kerch; Commissioners Ihnchak, Mantis, Moore, & Nanus
Voting Nay: None
Abstain: Commissioner Fettner

Chairperson Kerch declared that the motion passed 5-0.

SCHEDULED BUSINESS

DRAFT

1. Public Hearing #PUD-2025-00041 for the following: (1) a public hearing for a Special Use Permit for an Off-Street Parking Lot, Freestanding; (2) a public meeting for a Special Use Permit in the Nature of a Final Planned Development with modifications from City Code; (3) a public meeting for Final Plat of Re-subdivision with variations and waivers; and (4) a public meeting for Design Review for a 227 residential-unit townhome development (1660 and 1700 Old Deerfield Road)

Senior Planner Burhop reviewed the proposal:

- Recommendation
- Project Summary
    - 227 residential-townhome units
    - widening Old Deerfield Road
    - landscaping
    - additional Off-Street Parking
- Site Plan
- Aerial View was shown
- Commission & City Council Considerations
- Changes
    - Off-Street Parking Lot
    - engineering, storm water management
    - traffic, sound mitigation
    - landscaping detail
- Special Use Permit, Off-Street Parking Lot, Freestanding
    - RM1 zoning district (Conditional Use)
    - 2.5' landscaping strip
    - sidewalk along Old Deerfield Road
- Final Engineering Plans & Final Plat (changes from January 9, 2026)
- Landscaping
- Exterior Lighting
- Devonshire Court – Ridge Road & Old Deerfield Road – RR Intersection Updates
    - crosswalk now on south side
- Other New Items
    - acoustics
    - remediation schedule
    - construction-site logistics plan
- City or Agency Comments
- Modifications – Subdivision with Changes
- Modifications – Zoning
- Modifications – Zoning with Changes
- Modifications – Zoning & Fence (Additional Relief)
- Conditions
- Recommendation
- Public Benefit
- Specific Conditions
- Variations

Chairperson Kerch swore in Ms. Katie Jahnke Dale, Partner with DLA Piper, who stated her team would respond to questions.

DRAFT

Some PDC comments are:

- Commissioner Nanus asked if the parking lot would still be their property. Ms. Jahnke Dale said yes.
- Commissioner Fettner asked, regarding the construction-traffic exhibit, if all access is through the access road. Senior Planner Burhop said yes.
- Commissioner Ihnchak asked about wetland easement and maintenance. Senior Planner Burhop said there was a Condition related to open space. He displayed, read, and explained same. He stated the Applicant is responsible for maintenance. Ms. Jahnke Dale concurred, as they privately own it.

Chairperson Kerch asked if anyone in the audience wished to speak. The following came forward and was sworn in:

- Laurie Broutman asked, regarding the environmental site, if other Applicants have done this. She asked if remediation or clean-up was done by Solo Cup. Ms. Broutman asked if a plastics clean-up was done, if water in storage will affect nearby homes, light pollution, environmental impact on water quality of nearby homes, harm to wetlands, follows the Master Plan, etc.

  Corporation Counsel Martinez stated what's before the PDC (i.e. changes).

  Chairperson Kerch stated many questions have been answered – remediation, etc.

  Corporation Counsel said a *no further remediation* letter will come from the Illinois Environmental Protection Agency/IEPA. He noted the IEPA hasn't looked into it. Senior Planner Burhop said, regarding environmental concerns, a letter of *no remediation* would be provided by the IEPA.

  Commissioner Moore said this has been reviewed by storm water management, City Engineers. Senior Planner Burhop said he verified that Lake County Storm Water Commission is reviewing this.

  Chairperson Kerch said all of these things will be reviewed throughout this process. Senior Planner Burhop reminded Ms. Broutman's email is in the packet. He said anyone can contact him, and he would review Ms. Broutman's email with her.

- Martin Karp asked where the responsibility lies in the future if the traffic impact is underestimated. Chairperson Kerch said the Petitioner will have to fund future traffic studies if necessary. Senior Planner Burhop reminded this is a Condition and read same.
- Sandy Lurie said nearby residents believe the crosswalk is unnecessary. She wonders why the location of the crosswalk changed. Ms. Lurie noted KLOA is making a measurement. The crosswalk at Devonshire & Ridge is dangerous. Neighbors don't want trees cut down. With the crosswalk on the other side, one has less time. A sidewalk could be placed from the last house to Woodland Trail. This sets up the community for danger. She stated this is not a public benefit.

  Commissioner Fettner asked if it is a standard crosswalk or one with a light. Senior Planner Burhop replied it's a crosswalk with markings on the pavement.

- Ms. Lurie returned and asked if a stop sign could be placed; addresses safety issue.

  Commissioner Nanus advised there is a Traffic Commission. Director Fontane said this issue was already reviewed.

Commissioner Moore moved to adopt Findings of Fact for the Final PUD, the SUP for the off-street parking lot, freestanding, and the Final Plat, with 9 updates and modifications/Conditions presented by Staff. Commissioner Mantis seconded the motion.

On a voice vote
Voting Yea Commissioners Fettner, Ihnchak, Mantis, Moore, & Nanus
Voting Nay: Chairperson Kerch

Director Fontane declared that the motion passed 5-1.

Commissioner Moore moved to approve Design Review. Commissioner Fettner seconded the motion.

On a voice vote
Voting Yea Commissioners Fettner, Ihnchak, Mantis, Moore, & Nanus
Voting Nay: Chairperson Kerch

Director Fontane declared that the motion passed 5-1.

OTHER BUSINESS

1. Information Item: Administrative Design Review Update

There were no updates.

2. Next Regular Meeting – February 3, 2026

The next regular meeting will be February 3, 2026, in City Hall at 7 p.m.

3. Case Briefing

Director Fontane advised City Council approved 734 Central Avenue.

BUSINESS FROM THE PUBLIC

There was no Business from the Public.

ADJOURNMENT

Commissioner Nanus moved to adjourn at 8:15 p.m. Commissioner Mantis seconded the motion.

On a voice vote
Voting Yea Chairperson Kerch; Commissioners Henry, Ihnchak, Mantis, Moore, & Nanus
Voting Nay: None

Chairperson Kerch declared that the motion passed unanimously.

Respectfully Submitted,

Gale Cerabona
Recorder

MINUTES OF A REGULAR MEETING ON JANUARY 6, 2026, WERE APPROVED WITH CORRECTIONS.

DRAFT

REQUEST FOR PLAN & DESIGN COMMISSION ACTION

DATE REFERRED: for the February 3rd Plan and Design Commission ("***Commission***")

ORIGINATED BY: Department of Community Development

SUBJECT: DES-2026-00085 for Design Review and Sign Package with Variations (172-178 Skokie Valley Rd.)

SUBJECT PROPERTY

Site Location: 172-178 Skokie Valley Road
Current Zoning: B3 – Highway Commercial District
Applicant: Bryan Rosenblum
Property Owner: GTZ Properties

DESCRIPTION

The applicant Bryan Rosenblum, who is also the property owner, is seeking to create a new sign package for an existing three tenant commercial shopping center. The property occupies the addresses 172-178 Skokie Valley Road, and is located on the west side of the street, north of Lake Cook Road. The property is located in the B3 – Highway Commercial District. This will be the first sign package created for this property.

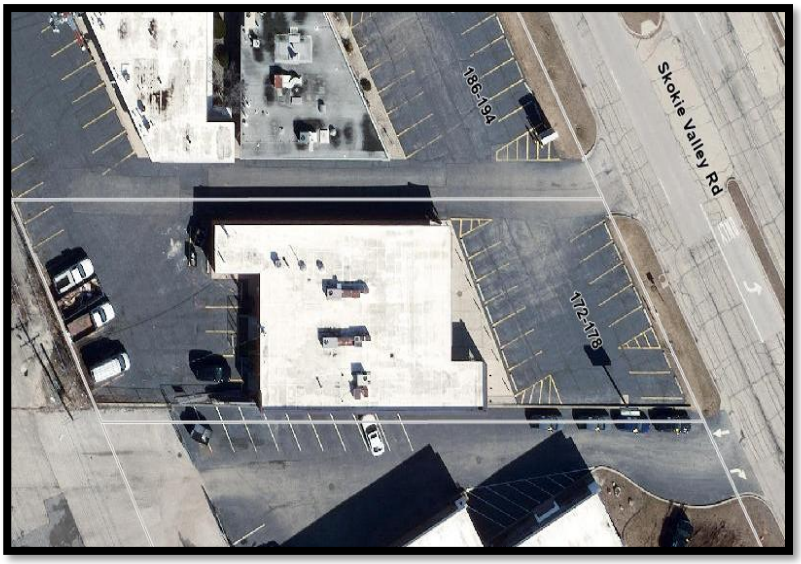

Figure 1: *172-178 Skokie Valley Road*

The property owner is proposing a new sign package in correlation with a proposed remodel of the property that involves façade improvements. There currently are three tenants. All three tenants will propose new signage for their respective spaces, should the Commission approve the proposed sign package. The applicant has provided a narrative in **Attachment 1.**

The Commission is considering and is the decision-maker for the following:

- Design Review for the exterior changes.
- A new sign package.

EXISTING SIGN PACKAGE

There is currently no sign package for this property.

However, the property is eligible for a sign package, per Sec. 150.2030(B)(2)(iii), "[…] any multiple tenant building for which an application has been submitted requesting approval of more than one sign on that building."

PROPOSED SIGN PACKAGE

The proposed sign package will include three wall signs, one for each tenant space. The signs will be located above the primary entry way for each tenant space. In addition, the signs are proposed to be internally illuminated, which is allowed by right in the B3 zoning district, pursuant to the specific regulations in Sec. 150.2007(A)(3). The signs are shown on the rendering in **Attachment 2.**

The Applicant proposes the following:

1. One 2' x 10' (20 Sq. Ft. in total area) externally illuminated wall sign.
    a. This sign is for the tenant at 172 Skokie Valley Road, will be located on the existing brick façade and will be externally illuminated by the existing goose neck light fixtures.
2. Two 2' x 10' (20 Sq. Ft. in total area) internally illuminated wall signs (one for each remaining tenant)
    a. These dimensions apply to the tenants at 174, 176, and 178 Skokie Valley Road respectively.
        i. 174 & 176 Skokie Valley Road are occupied by one tenant.
3. Three 2'x3' (6 Sq. Ft in total area) non-illuminated informational window signs to be located on the doorway of each tenant (one for each tenant).
4. Total Changes:
    a. Total *number* of signs allowed:
        i. PROPOSED SIGN PACKAGE: In total, the sign package will allow 6 total signs, (3 wall signs and 3 window signs); all signs will include identification information for the tenants,
        ii. NOTE – Two wall signs are internally illuminated & one is externally illuminated.
    b. Total *sign area* allowed for the tenant space:
        i. TOTAL SIGN AREA: 78 Sq. Ft. (6 total signs)
            - WALL SIGN TOTAL AREA: 60 sq. ft. (3 Signs)
            - WINDOW SIGN TOTAL AREA: 18 Sq. Ft (3 Signs)

Analysis to Code Allowance:

The total allowed wall sign area by code per Sec. 150.2025(B)(2)(g) would be approx. 125 Sq. Ft., as that is the lesser amount than 15% of the horizontal area of the façade (which is 142 Sq. Ft.)

Total window area allowed per Sec. 150.2025(B)(1) is, "Sign Area shall not exceed 10% of the total area of all windows or 6 square feet, whichever is greater."

SIGN PACKAGES & STANDARDS

Sign packages are powerful tools because Section 150.2030 allows applicants to flexible design as part of a sign package proposal. Section 150.2030 of the Zoning Code establishes regulations for Sign Packages. They are a tool meant to "ensure that properties with multiple buildings, and buildings with multiple occupants or tenants, provide signage that is well designed and consistent throughout that building or property, while providing some flexibility in the design of the Signs that are approved through a Sign package."

Standards for Sign Packages

The Code provides the following standards by which to evaluate Sign Package proposals:

Section 150.2030(D): "No Sign package shall be approved by the Plan and Design Commission unless the Plan and Design Commission shall find that the Sign package incorporates Signage that is:

1. Unified and consistent throughout the building or property; and
2. Of a higher quality than would be otherwise required under the applicable Sign regulations; and
3. Compatible with the design and materials of the building or buildings, and consistent with the area surrounding the building or property.

ILLUMINATION REVIEW

Internal illumination is allowed by right in the B3 Zoning District, pursuant to the Sec. 150.2007 regulations. Per Sec. 150.2007(A)(3)(a),"[…] (a) Signs in the B3, HC, and I Districts may be internally illuminated, provided that only the lettering or logo, or both, on the Sign is internally illuminated; […]". The other illumination requirements of Sec. 150.2007 also apply.

Condition of Approval:

- The sign plans must be notated that sign illumination will comply with Sec. 150.2007.

FAÇADE IMPROVEMENTS

As part of the proposal, the applicant is also proposing an exterior façade improvement. The applicant, who also owns the neighboring property to the north, will mirror the style of the façade on that property. The façade material will consist of James Harde artisan shiplap panel siding and will be painted a steel gray color.

In addition to the added material, the proposed changes to the façade will increase the overall height of the structure by 1'3". The previous height of the structure was 12', the proposed height will be 13'3".

DESIGN REVIEW

This project is subject to the provisions in Chapter 176 of the City Code, "Design Review." These include the following:

(A) Site Plan.

(1) The site shall be planned to (a) provide a desirable transition from the streetscape, (b) meet the parking design requirements of Article VIII of Chapter 150 of this Code, and (c) meet the landscape planting and screening requirements of Article XXII of Chapter 150 of this Code.

(2) Buildings shall be oriented so that the principal entry is visible and accessible from the primary street frontage.

(3) Building configurations that tend to catch and accumulate debris, leaves, dirt, trash and rubbish shall be avoided.

(4) Service yards, storage yards, exterior work areas, and utility meters shall either be (i) screened from view from public rights-of-way with dense planting or other materials harmonious with the building, or (ii) otherwise be located so as not to be visible from any public rights-of-way.

Staff Comment & Review: The proposed changes to the façade and exterior storefronts do not hinder the visibility or accessibility.

(B) *Site Treatment.*

(1) Where natural or existing topographic patterns contribute to beauty and utility of a development, they shall be preserved and enhanced, subject to the requirements set forth in Article XVIII of Chapter 150 of this Code.

(2) Grades of walks, parking spaces, terraces, and other paved areas shall provide a safe and stable surface for walking.

(3) Sidewalks, plazas, and pedestrian pathways shall be distinguished from Vehicular Use Areas through the use of materials, such as curbs, pavers, and brick or brushed or scored concrete, in order to ensure pedestrian safety and comfort.

(4) Newly installed utility services and service revisions necessitated by a modification to an Exterior Design Feature shall be place underground.

Staff Comment & Review: Applicant has not proposed any changes to existing walkways, parking spaces, or plazas

(C) Building Design.

(1) Building mass, scale, and lines, including roof forms, shall be designed to be harmonious with the design of adjacent buildings.

(2) Buildings shall be designed to avoid monotony with respect to roof line, windows, location and size of principal entry, location and orientation of garage entries, and cladding material and color.

(3) Building materials shall be durable and conducive to easy maintenance and upkeep.

(4) Mechanical or other utility equipment.

(a) Mechanical and utility equipment located on the roof or exterior of a building shall either be: (i) screened from view from public rights-of-way with materials harmonious to the building; or (ii) located as to not be visible from public rights-of-way or residential zoning districts.

(b) Ground-mounted mechanical or utility equipment shall comply with the screening requirements set forth in Article XXII of Chapter 150 of this Code.

(5) Building additions and modifications shall maintain safe access and pathways, and allow for the functional use of spaces between buildings.

Staff Comment & Review: The proposed façade improvements do increase the height of the structure, but maintain a similar structure to what is existing and comply with B3 height regulations. Thus, they avoid monotony with respect to all existing elements of the property.

(D) Lighting.

(1) Lighting fixtures shall be of a scale and finish, and shall be mounted at a height, that are appropriate to the building design and lighting function.

(2) Light sources shall be shielded from view from public rights-of-way and residential districts.

(3) Light poles located within a Vehicular Use Area shall be located between parking spaces.

(4) Lighting levels and light fixture design shall meet the standards of Article VI of Chapter 150 of this Code.

Staff Comment & Review: Applicant has indicated no changes, and all existing lighting shall remain as is.

(F) *Fences. Fences shall be constructed to meet the requirements of Article XXII of Chapter 150 of this Code and of Chapter 173 of this Code.*

Staff Comment & Review: Applicant has not proposed any new fences

APPROVAL PROCESS

The Plan & Design Commission has approval authority over the sign package proposal, per Sec. 150.2030. If appropriate a Certificate of Approval for the Proposed Sign Package has been drafted adopting the changes as proposed, in **Attachment 7**[1].

A Certificate of Approval is attached, approving the sign package as presented, if appropriate. This is not a recommendation by Staff.

RECOMMENDATION

The Department of Community Development recommends that the Plan and Design Commission discuss the proposal per the standards above. The Commission can approve the plans, deny them, or recommend changes and continue the discussion to a future meeting.

[1] The Cert. of Approval is **not** a recommendation by staff. The Commission may approve, modify, deny, or continue the request, and the Cert. of Approval is provided if the Commission finds it appropriate.

1/7/2026

Department of Community Development
City of Highland Park
1150 Half Day Road
Highland Park, IL 60035

Subject: Facade Renovation Project at 172-178 Skokie Valley Road, Highland Park, IL

To Whom This May Concern,

On behalf of GTZ Properties, we are pleased to submit this proposal for a facade renovation at 172–178 Skokie Valley Road. This project includes updating the dilapidated facade for a new one that will enhance visibility from the street and future leasing potential.

As part of this renovation, we will also be requesting new signage for the three tenant spaces. All signage will conform to our submitted plans and the City's code requirements.

We look forward to working closely with the City to ensure a successful and compliant execution of this project.

Sincerely,

Mitch Goltz
Manager

1 EXISTING FRONT ELEVATION @ #172-178
1/4" = 1'-0"

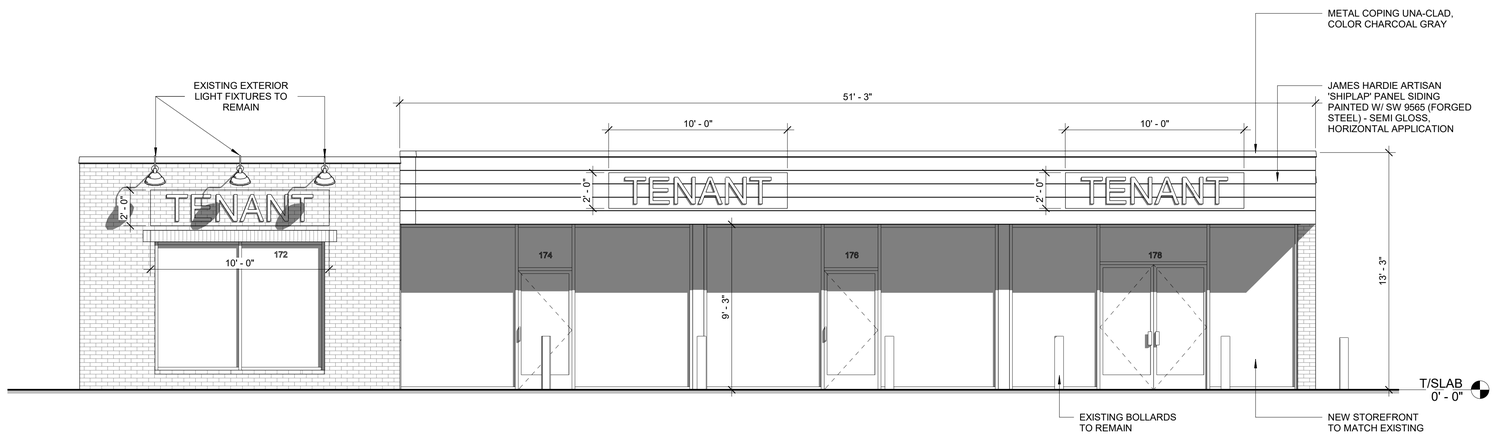

2 PROPOSED FRONT ELEVATION @ #172-178
1/4" = 1'-0"

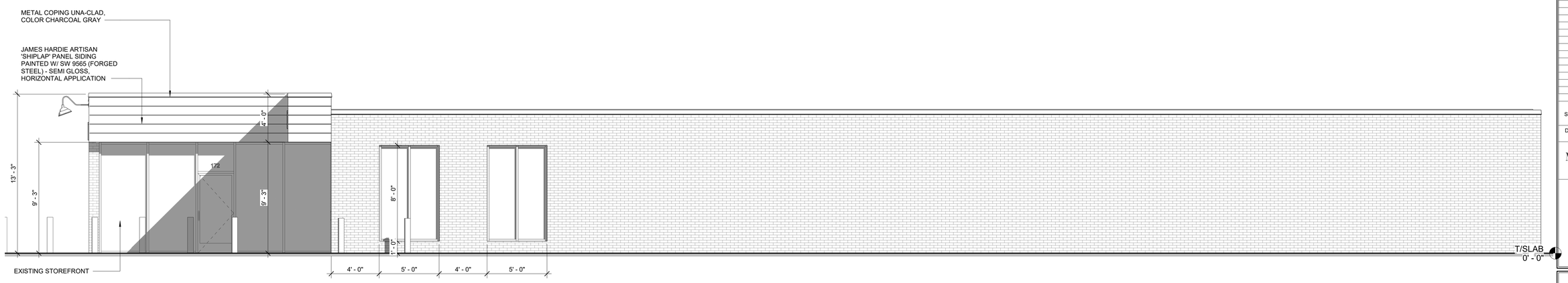

3 PROPOSED NORTH ELEVATION 1 @ #172-178
1/4" = 1'-0"

NOTES:

ADDITION AND/OR MODIFICATIONS TO THE EXTERIOR OF THE EXISTING BUILDING VISIBLE FROM THE PUBLIC RIGHT OF WAY (I.E. AWNING, EXTERIOR/ROOF MOUNTED EQUIPMENT, LIGHTING, PARAPET CONSTRUCTION, SIGNAGE, ETC.), REQUIRES DESIGN REVIEW APPROVAL.

AIR-IMPERMEABLE INSULATION WILL BE INSTALLED PER SECTION 1202.3.5.1.3.

BUILDING ELEVATIONS

FACADE RENOVATION

172-178 SKOKIE VALLEY ROAD
HIGHLAND PARK, IL. 60035

DESIGN STUDIO 24, LLC.
ARCHITECTS DESIGNERS - PLANNERS
2970 MARIA AVE., SUITE 202, NORTHBROOK, ILLINOIS 60062

NOT PUBLISHED - ALL RIGHTS AND COPYRIGHTS RESERVED. DESIGN STUDIO 24, LLC, EXPRESSLY DISCLAIMS ANY RESPONSIBILITY ARISING FROM ANY UNAUTHORIZED USE OF THE DRAWINGS AND NOTES. ANY AUTHORIZATION MUST BE IN WRITING.

CAUTION: Contractor to verify all existing conditions, dimensions, etc. PRIOR to bid and construction. Contractor to notify owner and architect of any discrepancies. No plea of ignorance to existing conditions found to be different from drawings will be accepted.

CAUTION: This drawing may have been reproduced at a size different than originally drawn. The owner and architect assume no responsibility for the use of incorrect scale. Drawings are NOT to be scaled. Not published. All rights reserved. Notify architect of any discrepancies.

STATEMENT OF COMPLIANCE I have prepared, or caused to be prepared under my supervision, the attached plans and specifications and state that, to the best of my knowledge and belief and to the extent of my contractural obligation, they are in compliance with the Codes and Ordinances of Highland Park, Illinois

DATE	Issue Date
REVISIONS	
10.28.2025	ISSUED FOR PERMIT

SCALE	
DRAWN BY:	Agnes S.

MARK T. DiGANCI
REG. ARCHITECT

STATE OF ILLINOIS
MARK T. DiGANCI
001-019342
REGISTERED ARCHITECT

LICENSE EXPIRES: 11.30.2026

A5.0

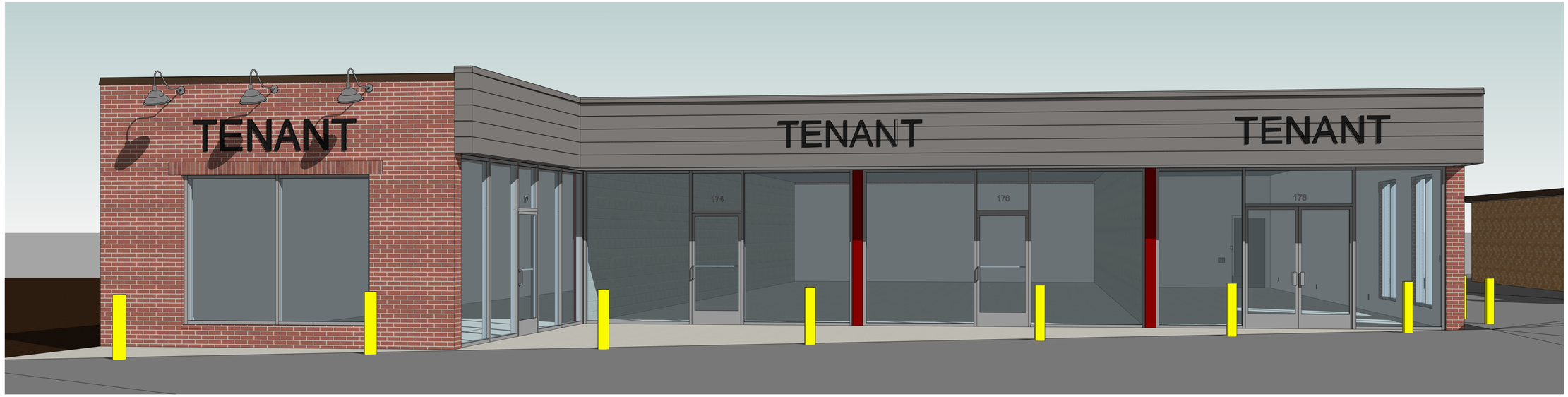

1 EAST ELEVATIONS

2 NORTH-EAST VIEW

3 SOUTH-EAST VIEW

PROPOSED 3D VIEWS

FACADE RENOVATION
172-178 SKOKIE VALLEY ROAD
HIGHLAND PARK, IL. 60035

DESIGN STUDIO 24, LLC.
ARCHITECTS DESIGNERS - PLANNERS
2970 MARIA AVE., SUITE 202, NORTHBROOK, ILLINOIS 60062

NOT PUBLISHED - ALL RIGHTS AND COPYRIGHTS RESERVED. DESIGN STUDIO 24, LLC. EXPRESSLY DISCLAIMS ANY RESPONSIBILITY ARISING FROM ANY UNAUTHORIZED USE OF THE DRAWINGS AND NOTES. ANY AUTHORIZATION MUST BE IN WRITING.

CAUTION: Contractor to verify all existing conditions, dimensions, etc. PRIOR to bid and construction. Contractor to notify owner and architect of any discrepancies. No plea of ignorance to existing conditions found to be different from drawings will be accepted.

CAUTION: This drawing may have been reproduced at a size different than originally drawn. The owner and architect assume no responsibility for the use of incorrect scale. Drawings are NOT to be scaled. Not published. All rights reserved. Notify architect of any discrepancies.

STATEMENT OF COMPLIANCE I have prepared, or caused to be prepared under my supervision, the attached plans and specifications and state that, to the best of my knowledge and belief and to the extent of my contractural obligation, they are in compliance with the Codes and Ordinances of Highland Park, Illinois

DATE	Issue Date
REVISIONS	
10.28.2025	ISSUED FOR PERMIT

SCALE	
DRAWN BY:	Agnes S.

MARK T. DiGANCI
REG. ARCHITECT

STATE OF ILLINOIS
MARK T. DiGANCI
001-017134
REGISTERED ARCHITECT

LICENSE EXPIRES: 11.30.2026

A5.1

UNIQUE BUILDERS
Additions • Decks • Remodeling
UNIQUE BUILDERS
Additions • Decks • Remodeling
HYLAND CLEANERS
Expert Tailor on Duty
Table Clothes, Bed Sheets, Press with Mangle Machine
SPACE FOR LEASE

UNIQUE BUILDERS
Additions • Decks • Remodeling
HYLAND CLEANERS
Expert Tailor on Duty
Table Clothes, Bed Sheets, Press with Mangle Machine
WOODRIDGE CENTER COURTYARD

UNIQUE BUILDERS
Additions • Decks • Remodeling
HYLAND CLEANERS
SPACE FOR LEASE

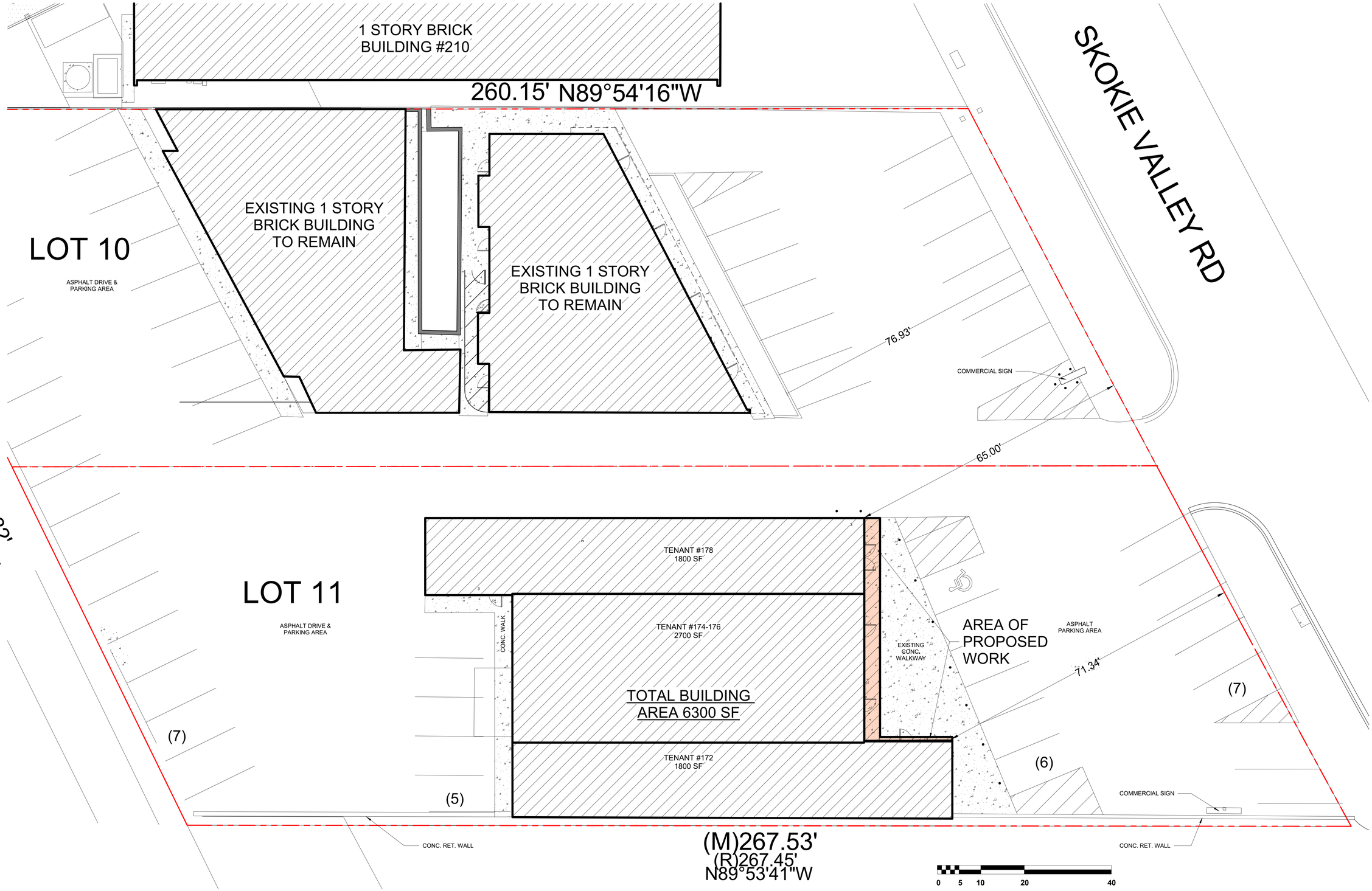

1 SITE PLAN - PROPOSED
1" = 10'-0"

SITE PLAN - PROPOSED

FACADE RENOVATION
172-178 SKOKIE VALLEY ROAD
HIGHLAND PARK, IL. 60035

DESIGN STUDIO 24, LLC.
ARCHITECTS DESIGNERS - PLANNERS
2970 MARIA AVE., SUITE 202, NORTHBROOK, ILLINOIS 60062

NOT PUBLISHED - ALL RIGHTS AND COPYRIGHTS RESERVED. DESIGN STUDIO 24, LLC. EXPRESSLY DISCLAIMS ANY RESPONSIBILITY ARISING FROM ANY UNAUTHORIZED USE OF THE DRAWINGS AND NOTES. ANY AUTHORIZATION MUST BE IN WRITING.

CAUTION: Contractor to verify all existing conditions, dimensions, etc. PRIOR to bid and construction. Contractor to notify owner and architect of any discrepancies. No plea of ignorance to existing conditions found to be different from drawings will be accepted.

CAUTION: This drawing may have been reproduced at a size different than originally drawn. The owner and architect assume no responsibility for the use of incorrect scale. Drawings are NOT to be scaled. Not published. All rights reserved. Notify architect of any discrepancies.

STATEMENT OF COMPLIANCE I have prepared, or caused to be prepared under my supervision, the attached plans and specifications and state that, to the best of my knowledge and belief and to the extent of my contractural obligation, they are in compliance with the Codes and Ordinances of Highland Park, Illinois

DATE	Issue Date
REVISIONS	
10.28.2025	ISSUED FOR PERMIT
SCALE	
DRAWN BY:	Agnes S.

MARK T. DiGANCI
REG. ARCHITECT

STATE OF ILLINOIS
MARK T. DiGANCI
001-017134
REGISTERED ARCHITECT

LICENSE EXPIRES: 11.30.2026

A0.3

City of Highland Park

Design Review Guidelines

The Plan and Design Commission refers to the General Design Standards established in Chapter 176 of the City Code. The Standards provide a standardized set of criteria that applicants can use to shape their application. The following is a helpful summary of the criteria:

1) Site Plan
   a) Does the project provide an adequate transition from the existing streetscape?
      i) **Yes, the renovation of the facade maintains the current streetscape rhythm while enhancing the appearance and function through reconfigured tenant spaces. The scale and layout remain consistent with the existing commercial corridor.**
   b) Is the principle entrance visible and accessible from the street frontage?
      i) **Yes, each of the tenant spaces will have a clearly visible and accessible entrance directly from the street frontage, improving pedestrian interaction and access.**
   c) Appropriate building configuration?
      i) **Yes, the configuration is efficient and flexible for commercial layouts, which will ultimately enhance tenant visibility and street presence.**
   d) Appropriate screening for exterior storage, utility meters, refuse areas, etc?
      i) **Yes, all utility meters and refuse areas will be screened per code requirements to minimize visual impact and maintain site aesthetics.**
2) Site Treatment
   a) Has the existing topography been preserved as much as possible?
      i) **Yes, the project maintains the existing topography, with no grading or elevation changes proposed.**
   b) Do pedestrian walkways use pavers, curbs, or other distinguishing materials to maximize their visibility and safety?
      i) **Yes, walkways will include defined paving materials and curbs to distinguish pedestrian areas and enhance safety.**
   c) Has all new or improved utility infrastructure been placed underground?
      i) **Yes, all new or improved utility infrastructure will be placed underground in accordance with city guidelines.**
3) Building Design
   a) Are the building mass, scale, and roof forms harmonious with the design of adjacent buildings?
      i) **Yes, the renovated facade will maintain a compatible scale, massing, and form with neighboring structures, supporting cohesive streetscape character.**
   b) Does the building design make efforts to avoid monotony?
      i) **Yes, the design will incorporate varied rooflines, distinct entrances for each tenant space, and diverse materials to avoid repetition and enhance architectural interest.**
      ii) Roof line
      iii) Windows
      iv) Location and size of main entrance
      v) Location and orientation of garages
      vi) Cladding material and color

c) Are the building materials durable and easy to maintain?

i) **Yes, high-quality, durable materials will be used for long-term maintenance and performance, appropriate for a commercial setting.**

d) Has mechanical equipment been adequately screened?

i) **Yes, all rooftop and ground-mounted mechanical equipment will be fully screened from view in compliance with city code.**

ii) Rooftop equipment

iii) Ground-mounted equipment

4) Lighting

a) Are the light fixtures appropriate in scale and finish to the building?

i) **Yes, all light fixtures will be selected to complement the building's design and scale.**

b) Are light sources shielded from adjacent properties and rights-of-way?

i) **Yes, lighting will be fully shielded to prevent glare onto adjacent properties and rights-of-way.**

c) Do fixture heights, designs, and lighting levels comply with Chapter 150?

i) **Yes, fixture height, design, and intensity will comply with Chapter 150 standards.**

5) Awnings, Fences, and Antennas

a) These must all be constructed to comply with their respective Articles in Chapters 150, 173, & 170

i) **Yes, any proposed awnings, fences, or antennas will meet all applicable codes and guidelines as outlined in the respective city chapters.**

FIGURE 24

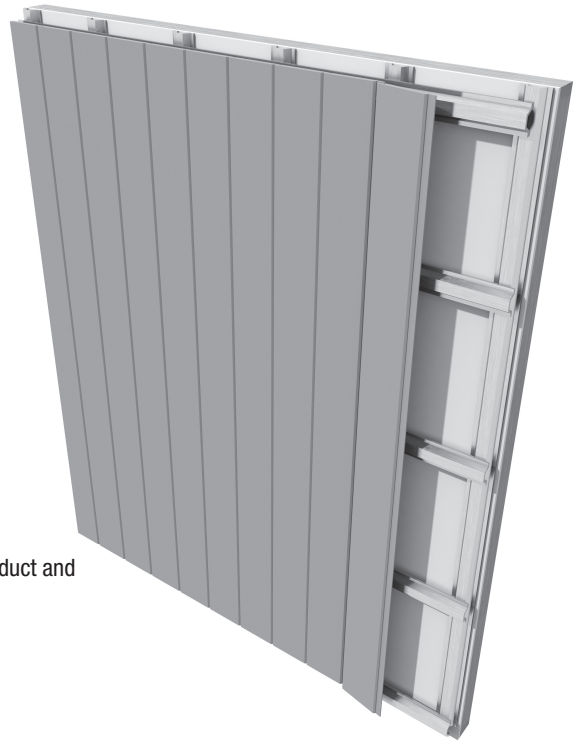

Fastening to Furring (when siding installed vertically)

Where James Hardie wall drainage guidelines require installation over furring, only a steel hat channel furring may be used. The steel furring must be 20 gauge (33 mil) minimum to 16 gauge (54 mil) maximum.

The furring directly behind the Artisan siding shall be oriented horizontally and spaced at either 16 in or 24 in on center.

- The wind resistance values for 16 in and 24 in o.c steel framing can be found in the relevant technical data sheet or product evaluation report are applicable to the horizontal furring

Sealant is not required if ventilation is created behind the cladding. This can be achieved via a double-layer furring system (fig. 24) or single-layer furring with ventilation features.

It is the responsibility of the design professional to design the furring system and its attachment to structural members such that the entire assembly can withstand all applicable loads (e.g. product and furring weight, wind loads, deflection limitations, thermal, etc.).

FASTENER REQUIREMENTS

- Do not nail within 2 in of the end of planks.
- For proper fastener selection and wind load table, refer to the product Technical Data Sheet at www.aspyredesign.com

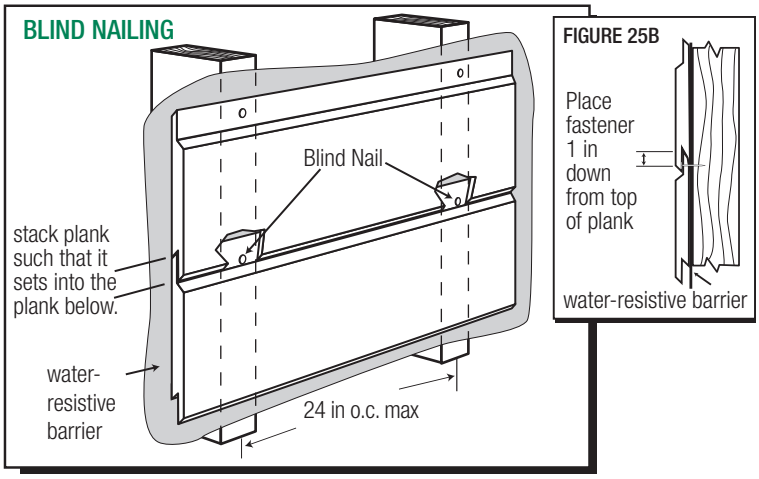

FIGURE 25A

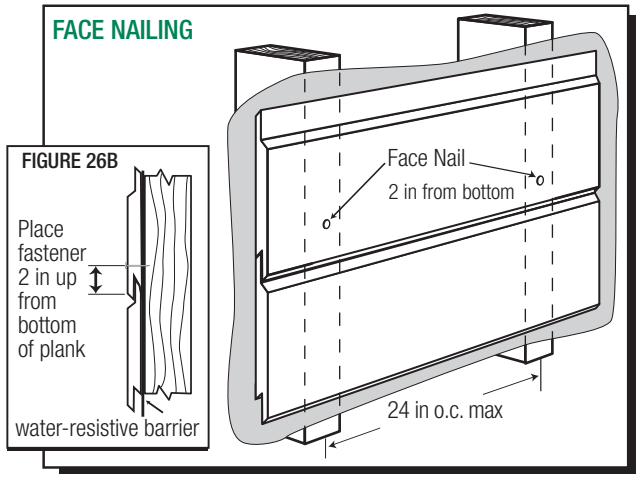

FIGURE 26A

DIRECT FASTENING TO WSP

Fastening directly to sheathing is allowed when James Hardie's installation and water management requirements (refer to Table I) do not require the use of a rainscreen behind the siding. The requirements for this application are below:

- A minimum 7/16 in Wood Structural Panel (WSP), attached per code, is available as the outer most layer directly behind the siding.
- Siding is fastened directly to the minimum 7/16 in WSP over a standard Water Resistive Barrier (WRB) or drainable housewrap.

CERTIFICATE OF DESIGN REVIEW APPROVAL

Date Approved:	February 3rd, 2026
Project Address:	172-178 Skokie Valley Road (the "Property")
Applicant:	Bryan Rosenblum (GTZ Properties)
Project Name / Description:	Design Review & Sign Package Amendment

Application Summary

The Plan & Design Commission approved the Design Review & Sign Package as specifically proposed in Attachment 2 of the packet.

Conditions of Approval:

- Must comply with size and method of internal illumination as stipulated in proposed Sign Package and Attachment 2 in the packet.
    - Applicant must notate in Attachment 2 that sign illumination must comply with Sec. 150.2007.
- The changes for signage are only those identified in Attachments 2 and the staff report.
- Applicant must obtain necessary building permits to proceed with installation of the signage shown in the attached sign plans.

Approved Plans:

- Approved Sign Plans & Elevations – per Attachment 2 in the posted packet for February 3, 2026

Approved Plans Attached.

See next page for notes and signature.

This is to verify that on this date, an approval was given by the Plan & Design Commission of the City of Highland Park, Illinois for this project. It is the responsibility of the Petitioner to ensure that all necessary permits are filed with the City. Plan & Design Commission approval does not imply that the project has met all code requirements of the City as subsequent approvals by the Building Division, Public Safety or Public Works may be required.

Anthony E. Mistretta

Anthony Mistretta
Planner I
Community Development

REQUEST FOR PLAN & DESIGN COMMISSION ACTION

DATE REFERRED: for the February 3rd Plan and Design Commission ("***Commission***")

ORIGINATED BY: Department of Community Development

SUBJECT: Design Review with a Sign Package Amendment for 1849 Green Bay Road

SUBJECT PROPERTY

Site Location: 1849 Green Bay Road, STE 112
Current Zoning: B5 – Downtown Commercial District
Applicant: Corey Glasson
Property Owner: T RENAISSANCE IL LLC

DESCRIPTION

The applicant Corey Glasson, who will be occupying the tenant space (Suite 112) at Renaissance Place, is seeking to amend the existing sign package for Renaissance Place (the "***Property***"). Currently the tenant space is not occupied, however the applicant owns a business named Twinkle Twinkle Little One. The applicant plans to move into the tenant space and be fully operational this year. The tenant is proposing adding awnings and additional signage. Currently, there are no tenants at Renaissance Place with awning signage. Staff have provided photographs in **Attachment 6**

Figure 1: *172-178 Skokie Valley Road*

There is a sign package for the Property and the proposed signage will go beyond the maximum allowed signage for this tenant space. The applicant has provided a narrative in **Attachment 1.**

EXISTING SIGN PACKAGE

The existing sign package for the Property was originally approved with the original PUD in 1998. The sign package lays out a signage standard for the entire property which included 1850 Second Street as well. The sign package has been previously amended before on a tenant by tenant basis, as all of the amendments to the sign package have only been for individual tenant spaces. The 1998 sign package is included in **Attachment 4.**

The tenant space is a corner tenant space, and has two pedestrian frontages. Because of this, the sign package allows for two wall signs by right for the tenant space. The sign package does not allow for internal illumination of signage; instead opting for external illumination of signage via mounted gooseneck lighting. For awning signage, the sign package allows awning signage in lieu of wall signage.

For wall signage, the following design standards must be followed:

1. Pin set letters
2. Must only show the company/tenant name
3. Non illuminated
4. Letters must be between 10”-20” in height

The sign package does not specify a specific amount for the maximum sign area, the limit on the letter height is the only size limit it provides. However this is an example provided that does show a total sign area of 12.8 Sq. Ft.

PROPOSED SIGN PACKAGE AMENDMENT

The proposed sign package amendment will only apply to the tenant’s unit, and not to any other tenant spaces in Renaissance Place. The applicant has received approval from the landlord for this amendment. In addition, the applicant intends on installing additional awnings to the façade. The signs and awnings are shown on the rendering in **Attachment 2.** All awnings are depicted as being 10’ in height from the bottom of the awning to the ground.

The Applicant proposes the following:

1. Two 1.25’ x 25.3’ (31.6 Sq. Ft. in total area) externally illuminated wall signs. There will be one sign for each pedestrian frontage
    a. These signs would be allowed by right, and conform to the sign package.
    b. The external illumination is gooseneck lighting.
2. Two 3.25’ x 9.25’ (30.1 Sq. Ft. in total area) awning graphic signs.
    a. These will be situated along the northern pedestrian walkway.
    b. One of these graphics will be installed on a proposed new awning.
    c. The awnings are 69 and 50.2 sq. ft. in area.
3. One 3.25’x 11.1’ (36 Sq. Ft in total area) awning graphic sign.
    a. This will be situated on the middle awning of the northern pedestrian walkway. This is a new proposed awning.
    b. The awning will be 90.8 sq. ft. in area.
4. One 25.3’ x 3.25’ awning graphic sign (82.2 Sq. Ft. in total area)
    a. This will be situated on the existing awning along the western pedestrian walkway.
    b. The awning will be 90.6 sq. ft. There is 82.2 sq. ft. of signage proposed, as defined in code with a box drawn around all sign elements. However, this sign include considerable black blank space.
5. Total Changes:
    a. Total number signs allowed:
        i. PROPOSED AMENDMENT: In total, the sign package will allow 6 total signs, (2 wall signs and 4 awning graphic signs); all signs will include identification information for the tenants,
        ii. NOTE –The two wall signs will be externally illuminated via gooseneck light fixtures
    b. Total sign area allowed for the tenant space:
        i. WALL SIGN TOTAL AREA: 63.2 sq. ft. (2 Signs)

- The total allowed wall sign area by code per Sec. 150.2025(B)(2)(g)would be 100 Sq. Ft. as that is the lesser amount than 15% of the horizontal area of the façade (approx. 160 Sq. Ft.). The same standard would apply for awning signage as well.

ii. AWNING SIGN TOTAL AREA: 178.4 Sq. Ft (4 Signs)

iii. TOTAL SIGN AREA: 241.6 Sq. Ft. (6 total signs)

SIGN PACKAGES & STANDARDS

Sign packages are powerful tools because Section 150.2030 allows applicants to flexible design as part of a sign package proposal. Section 150.2030 of the Zoning Code establishes regulations for Sign Packages. They are a tool meant to "ensure that properties with multiple buildings, and buildings with multiple occupants or tenants, provide signage that is well designed and consistent throughout that building or property, while providing some flexibility in the design of the Signs that are approved through a Sign package."

Standards for Sign Packages

The Code provides the following standards by which to evaluate Sign Package proposals:

Section 150.2030(D): "No Sign package shall be approved by the Plan and Design Commission unless the Plan and Design Commission shall find that the Sign package incorporates Signage that is:

1. Unified and consistent throughout the building or property; and
2. Of a higher quality than would be otherwise required under the applicable Sign regulations; and
3. Compatible with the design and materials of the building or buildings, and consistent with the area surrounding the building or property.

PROPOSED AWNINGS

The applicant is proposing two new awnings along the northern pedestrian walkway.

1. One 14' x 3.6' awning with black fabric to match surrounding store awnings
2. One 25.3' x 3.6' awning with black fabric to match the surrounding store awnings.

Figure 2: *Proposed Awnings for tenant space*

The proposed awnings are shown in Figure 2. The tenant space currently has two existing awnings with one at the principal entry way along the northern pedestrian walkway, and one along the façade of the western pedestrian walkway. The proposed awnings will be installed with black fabric that will match the existing awnings. Additionally, the new awnings are proposed to have graphics installed on them (as discussed in the Sign Package section of this report). Each awning will project out 3.5' into the pedestrian walkway and a mounted height of 10'.

DESIGN REVIEW – CHAPTER 176 STANDARDS OF REVIEW:

This project is subject to the provisions in Chapter 176 of the City Code, "Design Review." These include the following:

(A) Site Plan.

(1) The site shall be planned to (a) provide a desirable transition from the streetscape, (b) meet the parking design requirements of Article VIII of Chapter 150 of this Code, and (c) meet the landscape planting and screening requirements of Article XXII of Chapter 150 of this Code.

(2) Buildings shall be oriented so that the principal entry is visible and accessible from the primary street frontage.

(3) Building configurations that tend to catch and accumulate debris, leaves, dirt, trash and rubbish shall be avoided.

(4) Service yards, storage yards, exterior work areas, and utility meters shall either be (i) screened from view from public rights-of-way with dense planting or other materials harmonious with the building, or (ii) otherwise be located so as not to be visible from any public rights-of-way.

Staff Comment & Review: The principal entry way will remain visible from the right of way. Applicant is not proposing any changes to the entry way or pedestrian walkways

(B) *Site Treatment.*

(1) Where natural or existing topographic patterns contribute to beauty and utility of a development, they shall be preserved and enhanced, subject to the requirements set forth in Article XVIII of Chapter 150 of this Code.

(2) Grades of walks, parking spaces, terraces, and other paved areas shall provide a safe and stable surface for walking.

(3) Sidewalks, plazas, and pedestrian pathways shall be distinguished from Vehicular Use Areas through the use of materials, such as curbs, pavers, and brick or brushed or scored concrete, in order to ensure pedestrian safety and comfort.

(4) Newly installed utility services and service revisions necessitated by a modification to an Exterior Design Feature shall be place underground.

Staff Comment & Review: Applicant is not proposing any changes to parking spaces, pedestrian walkways, or plazas.

(C) Building Design.

(1) Building mass, scale, and lines, including roof forms, shall be designed to be harmonious with the design of adjacent buildings.

(2) Buildings shall be designed to avoid monotony with respect to roof line, windows, location and size of principal entry, location and orientation of garage entries, and cladding material and color.

(3) Building materials shall be durable and conducive to easy maintenance and upkeep.

(4) Mechanical or other utility equipment.

(a) Mechanical and utility equipment located on the roof or exterior of a building shall either be: (i) screened from view from public rights-of-way with materials harmonious to the building; or (ii) located as to not be visible from public rights-of-way or residential zoning districts.

(b) Ground-mounted mechanical or utility equipment shall comply with the screening requirements set forth in Article XXII of Chapter 150 of this Code.

(5) Building additions and modifications shall maintain safe access and pathways, and allow for the functional use of spaces between buildings.

Staff Comment & Review: Applicant is not proposing any new mechanical or utility equipment

(D) Lighting.

(1) Lighting fixtures shall be of a scale and finish, and shall be mounted at a height, that are appropriate to the building design and lighting function.

(2) Light sources shall be shielded from view from public rights-of-way and residential districts.

(3) Light poles located within a Vehicular Use Area shall be located between parking spaces.

(4) Lighting levels and light fixture design shall meet the standards of Article VI of Chapter 150 of this Code.

Staff Comment& Review: Applicant has indicated no changes, and all existing lighting shall remain as is.

(D) Awnings.

(1) Awnings are encouraged to be mounted with respect to the design of the building bays and windows, and so as to not detract from the window trim or other architectural features of the building.

(2) Awning design and construction shall meet the standards set forth in Article XX of Chapter 150 of this Code and in Chapter 170 of this Code.

Staff Comment & Review: The proposed awnings will be designed to match the projection and aesthetic of the existing awnings on the façade, as well as awnings that are installed throughout Renaissance Place.

(F) *Fences. Fences shall be constructed to meet the requirements of Article XXII of Chapter 150 of this Code and of Chapter 173 of this Code.*

Staff Comment & Review: Applicant is not proposing fencing**.**

APPROVAL PROCESS

The Plan & Design Commission has approval authority over the sign package proposal. If appropriate a Certificate of Approval for the Proposed Sign Package has been drafted adopting the changes as proposed, in **Attachment 7**[1].

A Certificate of Approval is attached, approving the sign package as presented, if appropriate. This is not a recommendation by Staff.

RECOMMENDATION

The Department of Community Development recommends that the Plan and Design Commission discuss the proposal per the standards above. The Commission can approve the plans, deny them, or recommend changes and continue the discussion to a future meeting.

[1] The Cert. of Approval is **not** a recommendation by staff. The Commission may approve, modify, deny, or continue the request, and the Cert. of Approval is provided if the Commission finds it appropriate.

Project Narrative – Signage & Awning Exception Request

Twinkle Twinkle Little One is requesting a signage and awning exception due to the unique nature of our new Highland Park location, which consists of two combined commercial spaces operating as one unified retail store.

Under the current signage ordinance, a corner store like ours is permitted two name signs and a total of two logos. While this standard works well for a typical single-storefront configuration, it assumes one primary entrance and a more compact frontage. Our new location differs in that it spans two adjacent storefronts, each with its own entrance, within a very large continuous retail footprint.

Because of the width of the combined space, a single name sign does not clearly communicate to customers that both entrances belong to the same business. Without additional visual continuity, customers may reasonably assume the entrances serve separate tenants, which can create confusion and negatively impact wayfinding, accessibility, and the overall customer experience.

To address this, we are requesting approval to include our logo on the awnings. The intent is not to increase visual clutter or advertising impact, but rather to clearly identify the space as one cohesive store, ensuring customers approaching from either direction immediately understand that both entrances serve Twinkle Twinkle Little One.

While it is not common for a tenant to occupy two storefronts, this configuration is necessary for our next phase of growth. Twinkle Twinkle Little One has operated successfully at 461 Central Avenue for the past six years, building a strong customer base and deep ties to the Highland Park community. This expansion represents a thoughtful, long-term investment in the city and reflects the natural progression of our business.

For the Highland Park location to be successful, it is essential that customers can easily recognize the store, understand the full extent of the space, and feel confident entering from either side. The requested exception supports clarity, consistency, and a positive streetscape experience, while maintaining the overall intent and spirit of the signage regulations.

We appreciate the City's consideration of this request and believe this solution balances regulatory intent with the practical realities of a unique storefront configuration.

Corey Children Store - 1849 Greenbay Rd Suite 112 & Suite 115 | Highland Park, IL 60035 United States

THE DRAWINGS, IDEAS, AND ARRANGEMENTS CONTAINED HEREIN ARE AND SHALL REMAIN THE PROPERTY OF SIGNFREAKS.NO PART THEREOF MAY BE COPIED OR REPRODUCED AND USED IN CONNECTION WITH ANY OTHER WORK OR PROJECT FOR WHICH THEY HAVE BEEN PREPARED WITHOUT WRITTEN CONSENT FROM SIGNFREAKS. IF UPON SUBMITTAL TO A PROPOSED CLIENT, THESE DRAWINGS ARE NOT RELEASED WITH THE AFORE WRITTEN CONSENT, THESE DRAWINGS SHALL BE RETURNED TO SIGNFREAKS, AND FURTHERMORE, SIGNS SHALL NOT BE PRODUCED IN LIKENESS OF THESE DESIGNS. IF OUR (SIGNFREAKS) DRAWING, DETAILS, OR RENDERINGS ARE IN FACT USED AND /OR DUPLICATED IN ANY WAY WITHOUT WRITTEN CONSENT, THERE WILL BE A MINIMUM OF $900.00 CHARGED OR 25% OF THE TOTAL COST OF THE JOB, WHICH EVER IS GREATER.

SIGNFREAKS
FREAKY FAST CUSTOM SIGNS
4809 N. CALIFORNIA,
SUITE A,
CHICAGO, IL 60625
T: 773-889-7446
INFO@SIGNFREAKS.COM

PROJECT NAME: Corey Children Store	SCALE:	REVISIONS:	CLIENT APPROVAL	LANDLORD APPROVAL	
ADDRESS: 1849 Greenbay Rd Suite 112 & Suite 115	DESIGN DATE: 01-12-2026	01-12-2026_rev.00	☐ AS SHOWN ☐ W/CHANGES	☐ AS SHOWN ☐ W/CHANGES	
CITY / STATE: Highland Park, IL 60035 United States	DRAWN BY: NASH		DATE:	DATE:	
SALESMAN: Mansur Quadri	ARTWORK:		SIGNATURE:	SIGNATURE:	

THE DRAWINGS, IDEAS, AND ARRANGEMENTS CONTAINED HEREIN ARE AND SHALL REMAIN THE PROPERTY OF SIGNFREAKS.NO PART THEREOF MAY BE COPIED OR REPRODUCED AND USED IN CONNECTION WITH ANY OTHER WORK OR PROJECT FOR WHICH THEY HAVE BEEN PREPARED WITHOUT WRITTEN CONSENT FROM SIGNFREAKS. IF UPON SUBMITTAL TO A PROPOSED CLIENT, THESE DRAWINGS ARE NOT RELEASED WITH THE AFORE WRITTEN CONSENT, THESE DRAWINGS SHALL BE RETURNED TO SIGNFREAKS, AND FURTHERMORE, SIGNS SHALL NOT BE PRODUCED IN LIKENESS OF THESE DESIGNS. IF OUR (SIGNFREAKS) DRAWING, DETAILS, OR RENDERINGS ARE IN FACT USED AND /OR DUPLICATED IN ANY WAY WITHOUT WRITTEN CONSENT, THERE WILL BE A MINIMUM OF $900.00 CHARGED OR 25% OF THE TOTAL COST OF THE JOB, WHICH EVER IS GREATER.

SIGNFREAKS
FREAKY FAST CUSTOM SIGNS
4809 N. CALIFORNIA,
SUITE A,
CHICAGO, IL 60625
T: 773-889-7446
INFO@SIGNFREAKS.COM

PROJECT NAME: Corey Children Store	SCALE:	REVISIONS:	CLIENT APPROVAL	LANDLORD APPROVAL
ADDRESS: 1849 Greenbay Rd Suite 112 & Suite 115	DESIGN DATE: 01-12-2026	01-12-2026_rev.00	☐ AS SHOWN ☐ W/CHANGES	☐ AS SHOWN ☐ W/CHANGES
CITY / STATE: Highland Park, IL 60035 United States	DRAWN BY: NASH		DATE:	DATE:
SALESMAN: Mansur Quadri	ARTWORK:		SIGNATURE:	SIGNATURE:

Corey Children Store - 1849 Greenbay Rd Suite 112 & Suite 115 | Highland Park, IL 60035 United States

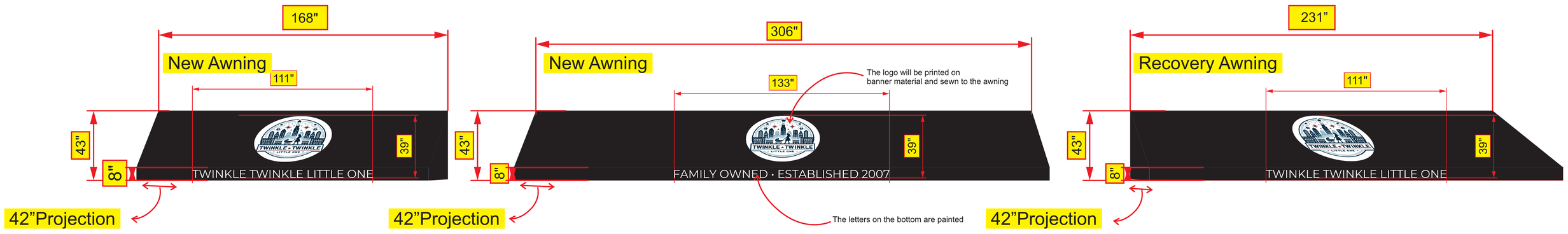

Product Information	
Product Type	New and Recovery Awning
Color	Black 4608-0000
Material	Sunbrella Canvas
Overall Size	Left side awning (168"W x 43"H x 42"P)
	Center awning (306"W x 43"H x 42"P)
	Right side awning (231"W x 43"H x 42"P)

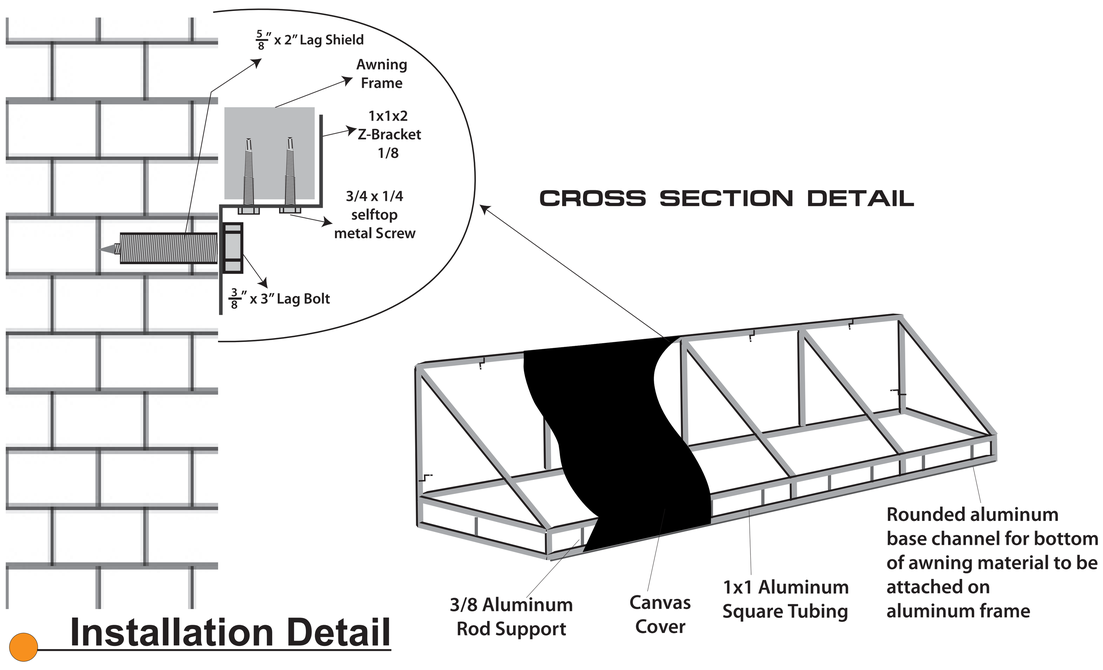

Installation Detail

Sunbrella Canvas

High-performance solution-dyed acrylic fabric designed for exterior use. UV and fade resistant, water-repellent, and breathable to prevent moisture buildup. Resistant to mold and mildew with low-maintenance cleaning requirements. Suitable for awnings, canopies, and outdoor shade structures, providing long-term durability and weather protection.

Aluminum Awning Frame

The awning frame is constructed from exterior-grade aluminum square tubing with welded joints, providing a lightweight, corrosion-resistant, and durable support structure. Finished with powder coating for weather protection, the frame is designed to securely hold the canopy fabric and withstand outdoor conditions.

PVC Vinyl Banner

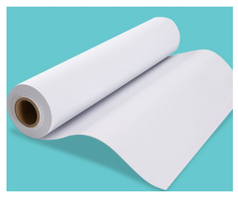

Banner fabricated from heavy-duty PVC vinyl suitable for outdoor display. Material is UV and weather-resistant, with reinforced edges and metal grommets for secure mounting. Digitally printed using fade-resistant inks to provide long-lasting color and visibility. Designed for temporary signage applications such as promotions, wayfinding, and events, and intended to be removed at project completion.

Product Information	
Product Type	Cutout letters
Color	Black
Overall Size	Twinkle Twinkle Little One (304"W x 15"H)

1/4" Thick Aluminum

Flat cut dimensional letters fabricated from 1/4" (6mm) solid aluminum sheet, precision cut to shape for clean and accurate profiles. Letters are lightweight, durable, and corrosion-resistant, suitable for exterior signage applications. Finished with painted, powder-coated, or brushed surface options as specified. Letters are mounted using studs or adhesive per installation requirements and provide a long-lasting, architectural-grade identity.

THE DRAWINGS, IDEAS, AND ARRANGEMENTS CONTAINED HEREIN ARE AND SHALL REMAIN THE PROPERTY OF SIGNFREAKS.NO PART THEREOF MAY BE COPIED OR REPRODUCED AND USED IN CONNECTION WITH ANY OTHER WORK OR PROJECT FOR WHICH THEY HAVE BEEN PREPARED WITHOUT WRITTEN CONSENT FROM SIGNFREAKS. IF UPON SUBMITTAL TO A PROPOSED CLIENT, THESE DRAWINGS ARE NOT RELEASED WITH THE AFORE WRITTEN CONSENT, THESE DRAWINGS SHALL BE RETURNED TO SIGNFREAKS, AND FURTHERMORE, SIGNS SHALL NOT BE PRODUCED IN LIKENESS OF THESE DESIGNS. IF OUR (SIGNFREAKS) DRAWING, DETAILS, OR RENDERINGS ARE IN FACT USED AND /OR DUPLICATED IN ANY WAY WITHOUT WRITTEN CONSENT, THERE WILL BE A MINIMUM OF $900.00 CHARGED OR 25% OF THE TOTAL COST OF THE JOB, WHICH EVER IS GREATER.

SIGNFREAKS
FREAKY FAST CUSTOM SIGNS
4809 N. CALIFORNIA,
SUITE A,
CHICAGO, IL 60625
T: 773-889-7446
INFO@SIGNFREAKS.COM

PROJECT NAME: Corey Children Store	SCALE:	REVISIONS:	CLIENT APPROVAL / LANDLORD APPROVAL
ADDRESS: 1849 Greenbay Rd Suite 112 & Suite 115	DESIGN DATE: 01-12-2026	01-12-2026_rev.00	☐ AS SHOWN ☐ W/CHANGES
CITY / STATE: Highland Park, IL 60035 United States	DRAWN BY: NASH		DATE:
SALESMAN: Mansur Quadri	ARTWORK:		SIGNATURE:

Corey Children Store - 1849 Greenbay Rd Suite 112 & Suite 115 | Highland Park, IL 60035 United States

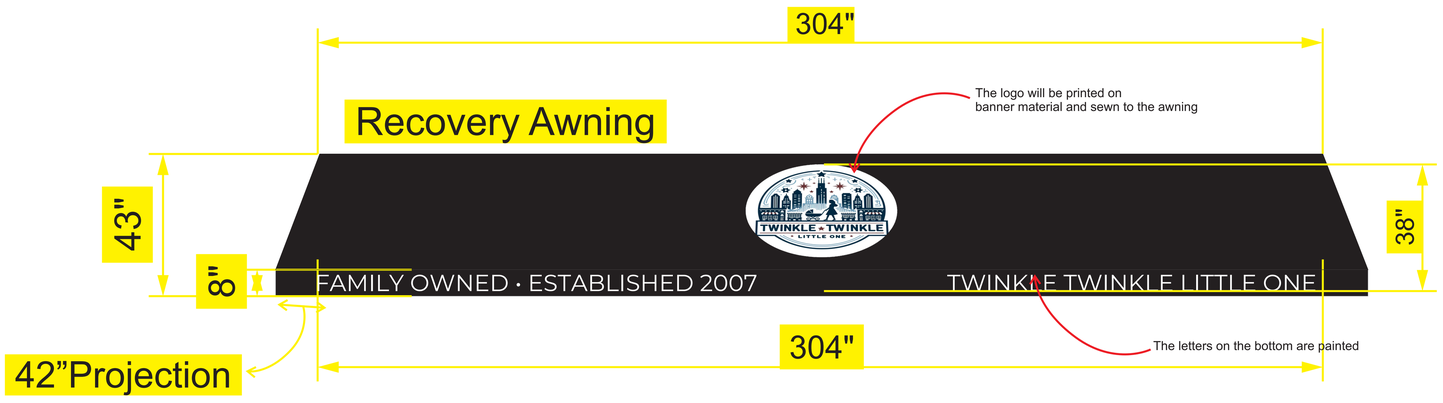

Product Information	
Product Type	Recovery Awning
Color	Black 4608-0000
Material	Sunbrella Canvas
Overall Size	(304"W x 43"H x 42"P)

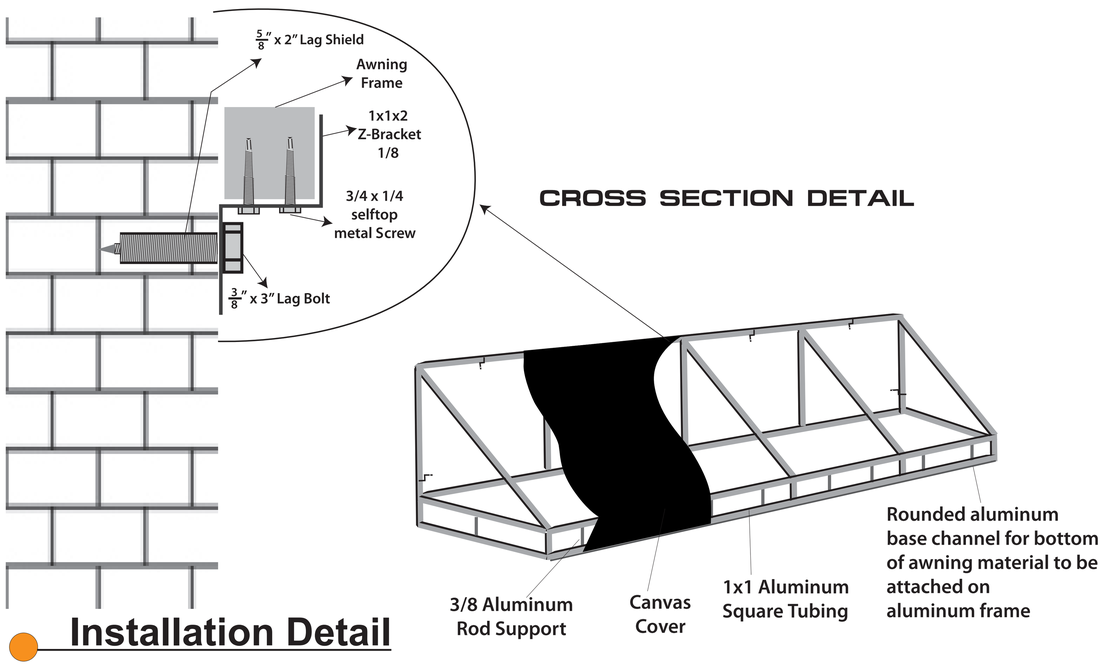

Installation Detail

Sunbrella Canvas

High-performance solution-dyed acrylic fabric designed for exterior use. UV and fade resistant, water-repellent, and breathable to prevent moisture buildup. Resistant to mold and mildew with low-maintenance cleaning requirements. Suitable for awnings, canopies, and outdoor shade structures, providing long-term durability and weather protection.

Aluminum Awning Frame

The awning frame is constructed from exterior-grade aluminum square tubing with welded joints, providing a lightweight, corrosion-resistant, and durable support structure. Finished with powder coating for weather protection, the frame is designed to securely hold the canopy fabric and withstand outdoor conditions.

PVC Vinyl Banner

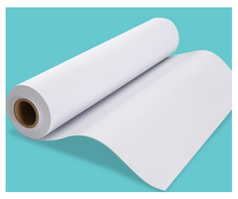

Banner fabricated from heavy-duty PVC vinyl suitable for outdoor display. Material is UV and weather-resistant, with reinforced edges and metal grommets for secure mounting. Digitally printed using fade-resistant inks to provide long-lasting color and visibility. Designed for temporary signage applications such as promotions, wayfinding, and events, and intended to be removed at project completion.

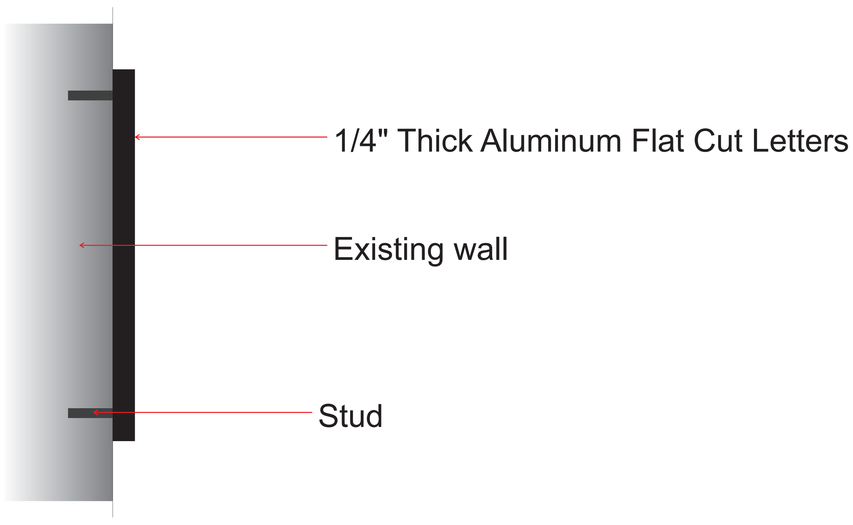

Product Information	
Product Type	Cutout letters
Color	Black
Overall Size	Twinkle Twinkle Little One (304"W x 15"H)

1/4" Thick Aluminum

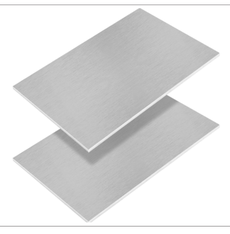

Flat cut dimensional letters fabricated from 1/4" (6mm) solid aluminum sheet, precision cut to shape for clean and accurate profiles. Letters are lightweight, durable, and corrosion-resistant, suitable for exterior signage applications. Finished with painted, powder-coated, or brushed surface options as specified. Letters are mounted using studs or adhesive per installation requirements and provide a long-lasting, architectural-grade identity.

THE DRAWINGS, IDEAS, AND ARRANGEMENTS CONTAINED HEREIN ARE AND SHALL REMAIN THE PROPERTY OF SIGNFREAKS.NO PART THEREOF MAY BE COPIED OR REPRODUCED AND USED IN CONNECTION WITH ANY OTHER WORK OR PROJECT FOR WHICH THEY HAVE BEEN PREPARED WITHOUT WRITTEN CONSENT FROM SIGNFREAKS. IF UPON SUBMITTAL TO A PROPOSED CLIENT, THESE DRAWINGS ARE NOT RELEASED WITH THE AFORE WRITTEN CONSENT, THESE DRAWINGS SHALL BE RETURNED TO SIGNFREAKS, AND FURTHERMORE, SIGNS SHALL NOT BE PRODUCED IN LIKENESS OF THESE DESIGNS. IF OUR (SIGNFREAKS) DRAWING, DETAILS, OR RENDERINGS ARE IN FACT USED AND /OR DUPLICATED IN ANY WAY WITHOUT WRITTEN CONSENT, THERE WILL BE A MINIMUM OF $900.00 CHARGED OR 25% OF THE TOTAL COST OF THE JOB, WHICH EVER IS GREATER.

SIGNFREAKS
FREAKY FAST CUSTOM SIGNS
4809 N. CALIFORNIA, SUITE A, CHICAGO, IL 60625
T: 773-889-7446
INFO@SIGNFREAKS.COM

PROJECT NAME: Corey Children Store	SCALE:	REVISIONS:	CLIENT APPROVAL / LANDLORD APPROVAL
ADDRESS: 1849 Greenbay Rd Suite 112 & Suite 115	DESIGN DATE: 01-12-2026	01-12-2026_rev.00	☐ AS SHOWN ☐ W/CHANGES
CITY / STATE: Highland Park, IL 60035 United States	DRAWN BY: NASH		DATE:
SALESMAN: Mansur Quadri	ARTWORK:		SIGNATURE:

RENAISSANCE PLACE SIGN CRITERIA

A. SIGN CRITERIA

The following outlines the basic sign criteria for all in-line retail tenants (not including department stores or theaters).

1. Signage Requirements

a. Number of Signs

Tenant shall identify the premises by installing one (1) non-illuminated sign or other graphic treatment on the storefront elevation facing the arcade. When the premises is a corner store, an additional identification sign shall be required for frontages in excess of 15 feet in length and shall be subject to the criteria for each elevation respectively.

b. Service Door Sign

A uniform store identification sign shall be installed by tenant per landlord's specifications. Tenant shall not post additional signs in service areas. Letters are to be 3-inch high white vinyl applied directly to the outside face of the tenant's door. Wording shall be limited to the tenant's name and space number only.

c. Postal Service Sign

Street address identification (street number only) for postal delivery is required and must be placed in the lowest left hand corner of the storefront glazing. Numbers to be 3 inch black vinyl mounted to the inside face of the glass.

d. Prohibited Signage

i. No sign, advertisement, notice, or other lettering shall be exhibited, inscribed, painted, or affixed on any part of the storefront(s) except store identification signs.

ii. All signage shall be approved at the sole discretion of the Landlord and are subject to City of Highland Park DRC approval and local code authority approvals.

iii. The following types of signs and sign components shall not be permitted.

a. Internally illuminated.
b. Boxed or cabinet type.
c. Cloth, paper, cardboard and similar stickers, or decals around or on surfaces exterior to the premises.
d. Freestanding.
e. Moving or flashing.
f. Noise or odor producing.
g. Exposed lamps.
h. Exposed fastenings.
i. Neon.
j. Channel or reverse internally illuminated channel letter.
k. No television or projection screens are permitted within 10 feet from the lease line.
l. Charge card decals shall not be affixed to any part of the storefront, nor shall any charge card identification be immediately visible from the public space.

iv. Sign company names or stamps shall be concealed and not be visible to public view.

v. All signs and their installation shall comply with all local building and electrical codes.

e. Time Clock

A seven calendar-day, 24-hour time clock shall be provided by Tenant to control illumination of Tenant's storefronts, show windows, and signs during required hours designated by Landlord.

2. Mall Store Identification Sign Specifications

a. Sign Type

All tenants are required to provide metal non-illuminated letters. Letters are to be pin-set to the stone sign band or the tenant's storefront. Metal letters are to be of a dark color. Awning signage is to be silk screened or painted letters on the face of the awning.

b. Store Name

Store identification signs shall be limited to the store name (d.b.a.). Wording of signs shall not include the product sold except as part of Tenant's trade name. The use of a crest, shield, logo, or other established corporate insignia which has been customarily displayed or associated with the store name may be approved on an individual basis by the Landlord at Landlord's sole discretion.

c. Illumination

Illumination of the signs is required. Tenant installed lighting to illuminate the tenant signage will be by stem mounted low voltage accent lights and must be per Landlord's specifications. All tenants will be required to use the same lighting fixtures for their illumination.

d. Allowable Size of Signs

i. Storefront letters located 7'-0" or more above the mall finished floor shall not be less than 10" nor more that 20" maximum letter size.

ii. Letters located less than 7'-0" above the finished floor shall not exceed six inches (6") high.

iii. A non-illuminated non-dimensional sign composed of letters having a maximum height of three to six (3" to 6") inches, applied directly to the inside face of the storefront glass of gold or silver leaf, silk screened, painted or etched glass or other material may be permitted at the discretion of the Landlord.

e. Sign Position

No part of lettering or insignia shall be less than 1'-0" above the floor of the center, nor less than 6" from the top of the Tenant's storefront. No part of any sign shall extend beyond five inches (5") of the mall lease line (except for Awning signage).

f. Awning Signage

Silk screened or painted letters on the face of the awning shall be between six to eight (6" to 8") inches high. Awnings are to be fabric material (i.e., canvass).

SCALE 1" = 1'

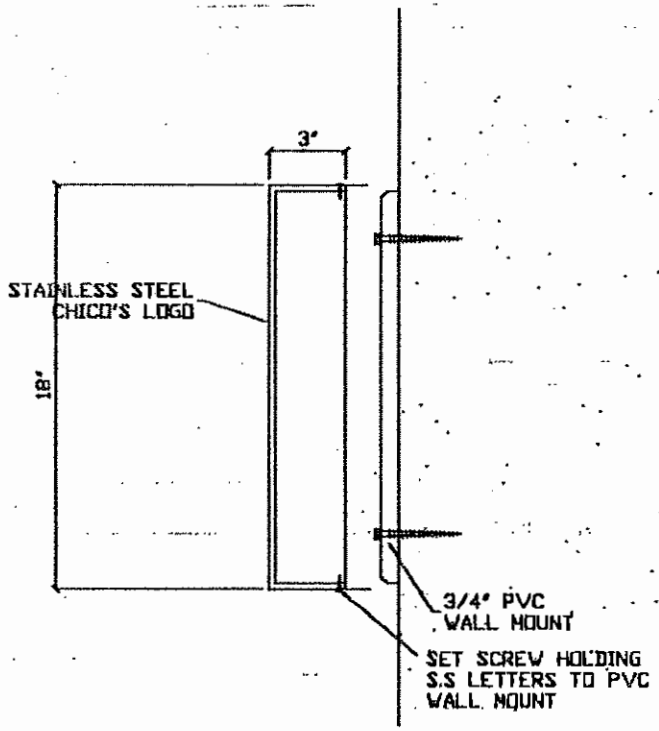

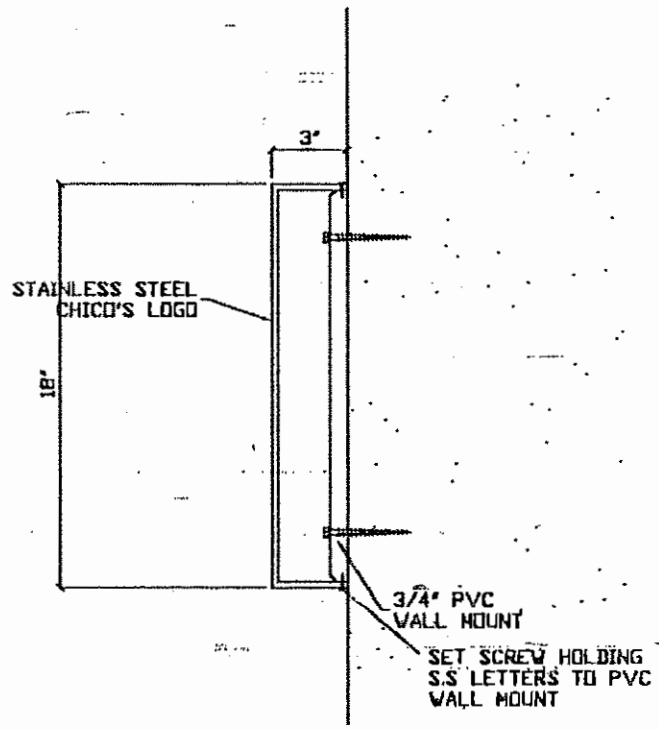

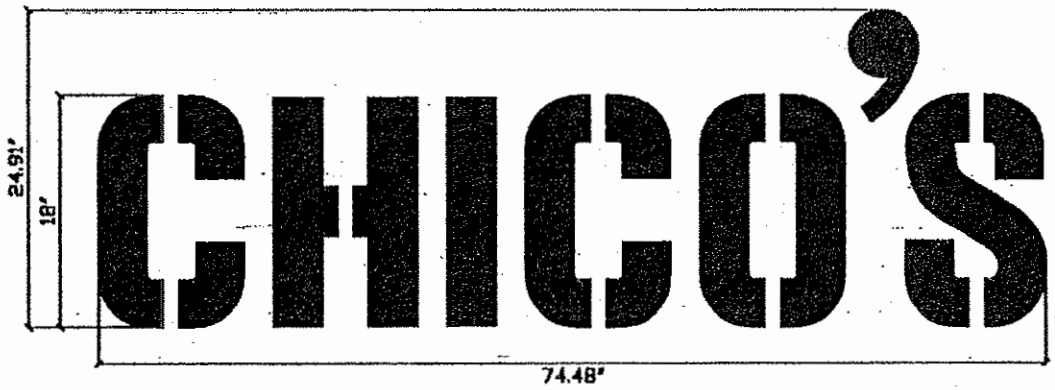

LOGO SIZES:

H: 24.91" W: 74.48" SQ. FT: 12.88

USign & MILL CORPORATION
12011 Pendleton Lane #1
Fort Myers FL 33907
(941) 936-9154
FAX (941) 936-9366

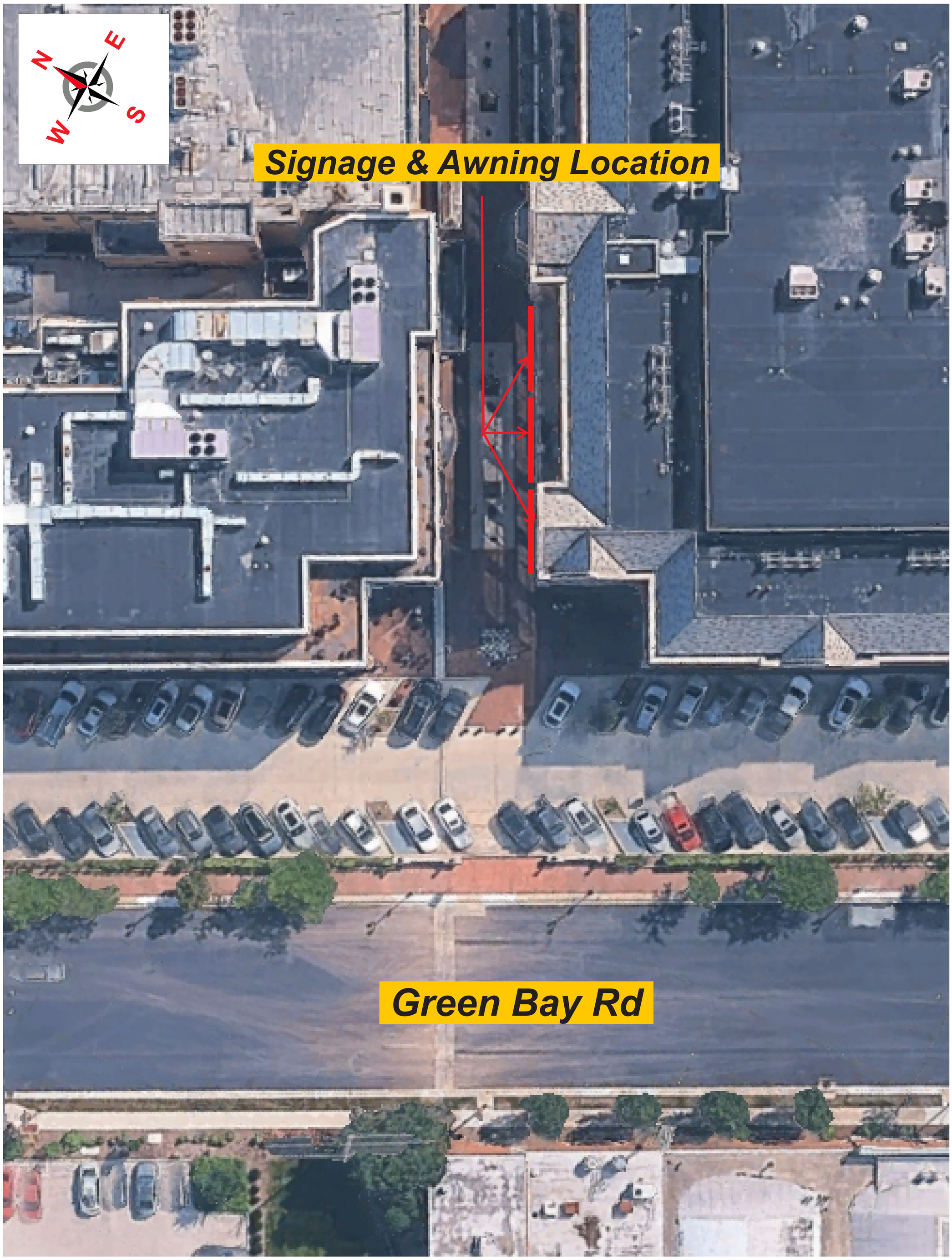

THE DRAWINGS, IDEAS, AND ARRANGEMENTS CONTAINED HEREIN ARE AND SHALL REMAIN THE PROPERTY OF SIGNFREAKS.NO PART THEREOF MAY BE COPIED OR REPRODUCED AND USED IN CONNECTION WITH ANY OTHER WORK OR PROJECT FOR WHICH THEY HAVE BEEN PREPARED WITHOUT WRITTEN CONSENT FROM SIGNFREAKS. IF UPON SUBMITTAL TO A PROPOSED CLIENT, THESE DRAWINGS ARE NOT RELEASED WITH THE AFORE WRITTEN CONSENT, THESE DRAWINGS SHALL BE RETURNED TO SIGNFREAKS, AND FURTHERMORE, SIGNS SHALL NOT BE PRODUCED IN LIKENESS OF THESE DESIGNS. IF OUR (SIGNFREAKS) DRAWING, DETAILS, OR RENDERINGS ARE IN FACT USED AND /OR DUPLICATED IN ANY WAY WITHOUT WRITTEN CONSENT, THERE WILL BE A MINIMUM OF $900.00 CHARGED OR 25% OF THE TOTAL COST OF THE JOB, WHICH EVER IS GREATER.

SIGNFREAKS
FREAKY FAST CUSTOM SIGNS
4809 N. CALIFORNIA,
SUITE A,
CHICAGO, IL 60625
T: 773-889-7446
INFO@SIGNFREAKS.COM

PROJECT NAME: Corey Children Store	SCALE:	REVISIONS:	CLIENT APPROVAL	LANDLORD APPROVAL
ADDRESS: 1849 Greenbay Rd Suite 112 & Suite 115	DESIGN DATE: 01-12-2026	01-12-2026_rev.00	☐ AS SHOWN ☐ W/CHANGES	☐ AS SHOWN ☐ W/CHANGES
CITY / STATE: Highland Park, IL 60035 United States	DRAWN BY: NASH		DATE:	DATE:
SALESMAN: Mansur Quadri	ARTWORK:		SIGNATURE:	SIGNATURE:

THE DRAWINGS, IDEAS, AND ARRANGEMENTS CONTAINED HEREIN ARE AND SHALL REMAIN THE PROPERTY OF SIGNFREAKS.NO PART THEREOF MAY BE COPIED OR REPRODUCED AND USED IN CONNECTION WITH ANY OTHER WORK OR PROJECT FOR WHICH THEY HAVE BEEN PREPARED WITHOUT WRITTEN CONSENT FROM SIGNFREAKS. IF UPON SUBMITTAL TO A PROPOSED CLIENT, THESE DRAWINGS ARE NOT RELEASED WITH THE AFORE WRITTEN CONSENT, THESE DRAWINGS SHALL BE RETURNED TO SIGNFREAKS, AND FURTHERMORE, SIGNS SHALL NOT BE PRODUCED IN LIKENESS OF THESE DESIGNS. IF OUR (SIGNFREAKS) DRAWING, DETAILS, OR RENDERINGS ARE IN FACT USED AND /OR DUPLICATED IN ANY WAY WITHOUT WRITTEN CONSENT, THERE WILL BE A MINIMUM OF $900.00 CHARGED OR 25% OF THE TOTAL COST OF THE JOB, WHICH EVER IS GREATER.

SIGNFREAKS
FREAKY FAST CUSTOM SIGNS
4809 N. CALIFORNIA,
SUITE A,
CHICAGO, IL 60625
T: 773-889-7446
INFO@SIGNFREAKS.COM

PROJECT NAME: Corey Children Store	SCALE:	REVISIONS:	CLIENT APPROVAL	LANDLORD APPROVAL
ADDRESS: 1849 Greenbay Rd Suite 112 & Suite 115	DESIGN DATE: 01-12-2026	01-12-2026_rev.00	☐ AS SHOWN ☐ W/CHANGES	☐ AS SHOWN ☐ W/CHANGES
CITY / STATE: Highland Park, IL 60035 United States	DRAWN BY: NASH		DATE:	DATE:
SALESMAN: Mansur Quadri	ARTWORK:		SIGNATURE:	SIGNATURE:

Pok
OPENING
LATE
WINTER
CAR SEATS • STROLLERS • NURSERY
FURNITURE • GLIDERS • TOYS • CLOTHING
PERSONALIZATION • BABY REGISTRY
WWW.TWINKLETWINKLELITTLEONE.COM
WE'RE HIRING!
WWW.TWINKLETWINKLELITTLEONE.COM
772-473-3000 EXT 3

DeNUCCIS
Complimentary
Valet Parking
Please Stop Here

DeNUCCIS
Complimentary
Valet Parking
Please Stop Here

112
OPENING
LATE
WINTER
TWINKLE • TWINKLE
CAR SEATS • STROLLERS • NURSERY
FURNITURE • GLIDERS • TOYS • CLOTHING
PERSONALIZATION • BABY REGISTRY
WWW.TWINKLETWINKLELITTLEONE.COM
DESIGN
SION
ING FOR
E ON THIS
EDULED
AT
TY HALL
0867
ion

Local Leaf
FARM
159

Les Miserables

CERTIFICATE OF DESIGN REVIEW APPROVAL

Date Approved:	February 3rd, 2026
Project Address:	1849 Green Bay Road (the "Property")
Applicant:	Corey Glasson (Twinkle Twinkle Little One)
Project Name / Description:	Design Review & Sign Package Amendment

Application Summary
The Plan & Design Commission approved the Design Review & Sign Package as specifically proposed in Attachment 2 of the packet.

Conditions of Approval:

- Must comply with size and method of internal illumination as stipulated in proposed Sign Package and Attachment 2 in the packet. No internal illumination is allowed.
- The changes for signage are only the tenant space identified in Attachments 2 and the staff report.
- The proposed awnings shall be installed to code, and should not stray away from the proposed alterations shown in the elevations in Attachment 2.
- Applicant must obtain necessary building permits to proceed with installation of the signage shown in the attached sign plans.

Approved Plans:

- Approved Sign Plans & Elevations – per Attachment 2 in the posted packet for February 3, 2026

Approved Plans Attached.

See next page for notes and signature.

DRAFT

This is to verify that on this date, an approval was given by the Plan & Design Commission of the City of Highland Park, Illinois for this project. It is the responsibility of the Petitioner to ensure that all necessary permits are filed with the City. Plan & Design Commission approval does not imply that the project has met all code requirements of the City as subsequent approvals by the Building Division, Public Safety or Public Works may be required.

_____

Anthony Mistretta
Planner I
Community Development

DRAFT